MODEL
FKDB

2-way, pilot shifted, proportional throttle with bleed down
SERIES 2 / CAPACITY: 40 L/min. / CAVITY: T-22A

snhy.com/FKDB

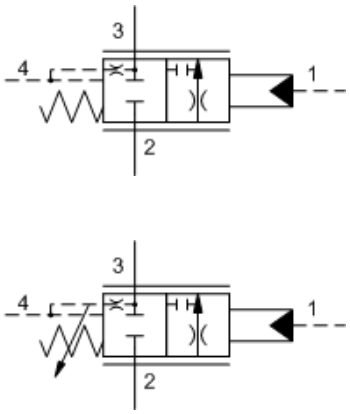

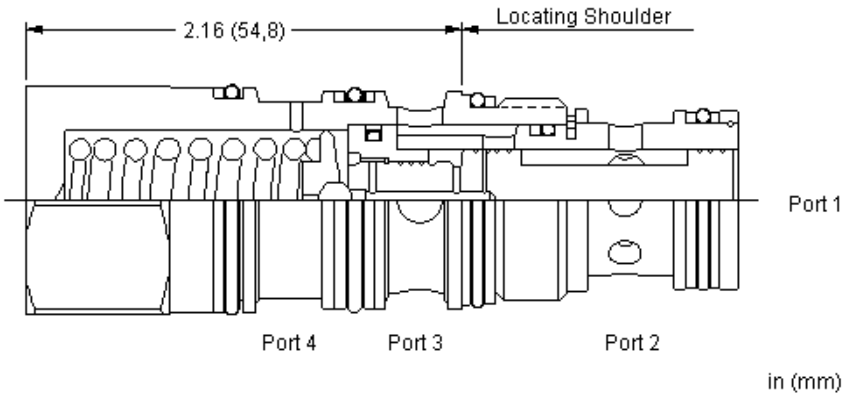

This valve is a 2-way, 2-position proportional throttle. Ports 2 and 3 are normally closed. Pilot pressure at port 1 creates a metering orifice between port 2 and 3 that is proportional to the pressure at 1. The force balance of the flow forces, spring and pilot pressure results in a degree of partial self-compensation as the load pressure changes.

This valve includes a bleed-down feature which connects ports 3 to 4 in the spring-biased position. The bleed-down feature is useful when the valve is used as a meter-in flow control in circuits which include counterbalance valves downstream of port 3. The bleed-down connection is closed as the valve is piloted with increasing pressure at port 1.

Pressure at port 4 directly opposes pressure at port 1.

TECHNICAL DATA

NOTE: DATA MAY VARY BY CONFIGURATION. SEE CONFIGURATION SECTION.

Maximum Operating Pressure	350 bar
Maximum Valve Leakage at 110 SUS (24 cSt)	30 cc/min.@70 bar
Pilot Volume Displacement	4,9 cc
Minimum Pilot Pressure to Operate	7 bar
Bypass orifice	0,8 mm
Hysteresis	± 2 %
Adjustment - No. of CW Turns from Min. to Max. setting	5
Locknut Hex Size	15 mm
Locknut Torque	9 - 10 Nm
Seal kit - Cartridge	Buna: 990022002
Seal kit - Cartridge	Polyurethane: 990022002
Seal kit - Cartridge	Viton: 990022006

CONFIGURATION OPTIONS

Model Code Example: FKDBXCN

CONTROL (X)	SPOOL CONFIGURATION (C)	SEAL MATERIAL (N)
X Not Adjustable	**C** Normally Closed	**N** Buna-N
L Tuning Adjustment		**V** Viton

© 2018 Sun Hydraulics Corporation