MODEL
PVDA8

Pilot operated, pressure reducing/relieving main stage with integral T-8A control cavity and drain to port 4

SERIES 1 / CAPACITY: 40 L/min. / CAVITY: T-21A

snhy.com/PVDA8

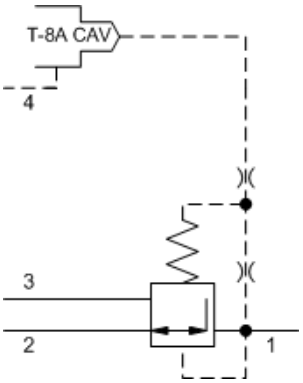

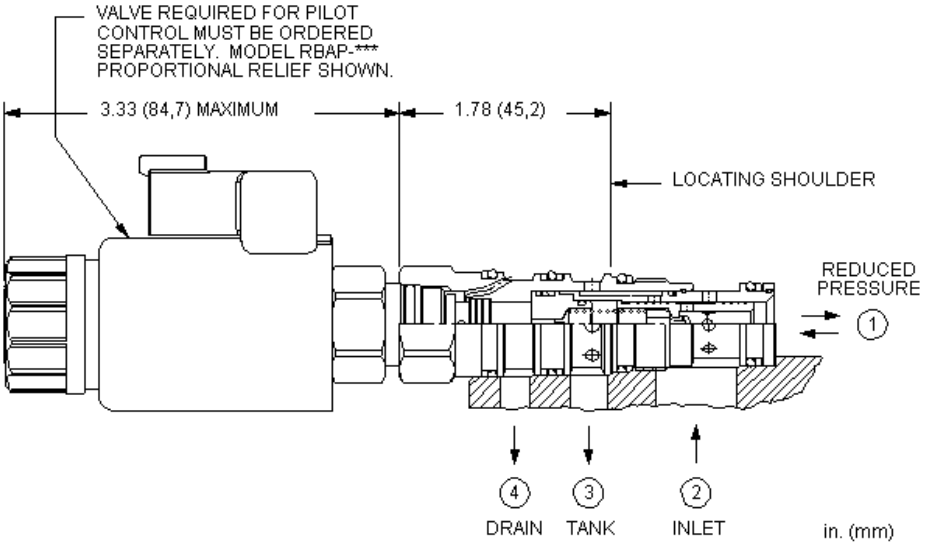

This valve is a 3-way, normally open modulating element, externally drained, that incorporates an integral pilot control cavity. The pilot control cavity will accept any T-8A pressure control cartridge. The valve reduces a high primary pressure at the inlet (port 2) to a constant reduced pressure at port 1, with a full flow relief function from port 1 to tank (port 3). The pilot cartridge's setting determines the difference in pressure between reduced pressure (port 1) and the drain (port 4).

TECHNICAL DATA

NOTE: DATA MAY VARY BY CONFIGURATION. SEE CONFIGURATION SECTION.

Maximum Operating Pressure	350 bar
Control Pilot Flow	0,11 - 0,16 L/min.
Pilot Control Cavity	T-8A
Seal kit - Cartridge	Buna: 990021007
Seal kit - Cartridge	Polyurethane: 990021002
Seal kit - Cartridge	Viton: 990021006

NOTES

Compound cartridge (pilot and main stage) assembly information is provided for reference only. Cartridges must be ordered separately and assembled at point of use.

CONFIGURATION OPTIONS

Model Code Example: PVDA8WN

MINIMUM CONTROL PRESSURE (W)	SEAL MATERIAL (N)
W 100 psi (7 bar)	**N** Buna-N
D 25 psi (1,7 bar)	**V** Viton

© 2018 Sun Hydraulics Corporation