MODEL
MBGG

4.5:1 pilot ratio, load reactive, load control valve
SERIES 3 / CAPACITY: 240 L/min. / CAVITY: T-17A

snhy.com/MBGG

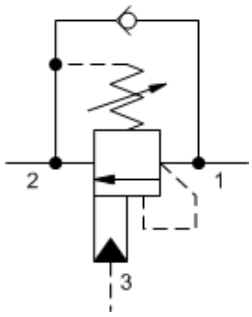

3-Port Non-vented

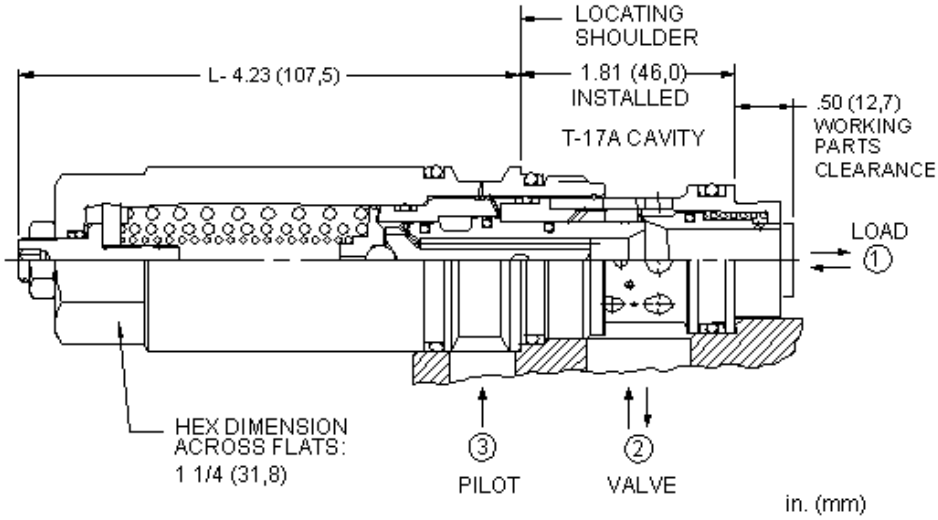

Load reactive, load control valves with pilot assist combine two valves; a check valve and a relief valve. The check valve allows free flow from the directional valve (port 2) to the load (port 1) while a direct-acting, pilot-assisted relief valve controls flow from port 1 to port 2. Pilot assist at port 3 lowers the effective setting of the relief valve at a rate determined by the pilot ratio.

TECHNICAL DATA

NOTE: DATA MAY VARY BY CONFIGURATION. SEE CONFIGURATION SECTION.

Pilot Ratio	4.5:1
Maximum Recommended Load Pressure at Maximum Setting	260 bar
Maximum Setting	350 bar
Factory Pressure Settings Established at	30 cc/min.
Maximum Valve Leakage at Reseat	0,3 cc/min.
Check Cracking Pressure	1,7 bar
Adjustment - No. of CCW Turns from Min. to Max. Setting	9
Reseat	>85% of setting
Locknut Hex Size	15 mm
Locknut Torque	9 - 10 Nm
Seal kit - Cartridge	Buna: 990017007
Seal kit - Cartridge	Polyurethane: 990017002
Seal kit - Cartridge	Viton: 990017006

CONFIGURATION OPTIONS

Model Code Example: MBGGLHN

CONTROL (L)

- **L** Standard Screw Adjustment

FUNCTIONAL SETTING RANGE (H)

- **H** 1000 - 4000 psi (70 - 280 bar), 3000 psi (210 bar) Standard Setting
- **J** 2000 - 5000 psi (140 - 350 bar), 3000 psi (210 bar) Standard Setting

SEAL MATERIAL (N)

- **N** Buna-N
- **V** Viton

MATERIAL/COATING

- Standard Material/Coating
- **/AP** Stainless Steel, Passivated
- **/LH** Mild Steel, Zinc-Nickel

© 2018 Sun Hydraulics Corporation