MODEL
CXFC

Free flow nose to side check valve with port 3 blocked
SERIES 2 / CAPACITY: 160 L/min. / CAVITY: T-2A

snhy.com/CXFC

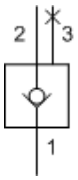

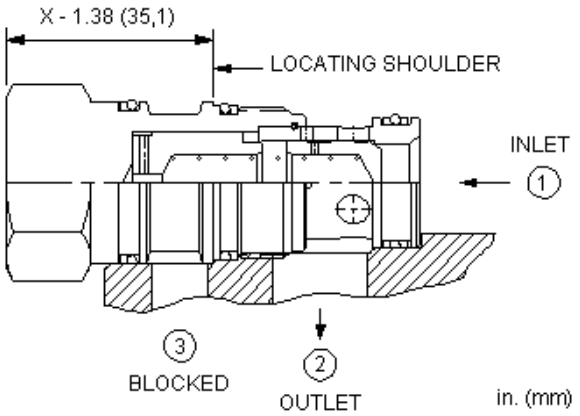

Free-flow, nose-to-side cheater check valves function as a standard 2-port check valve in a 3-port cavity with port 3 of the cartridge blocked off. These valves are useful in circuits where a check valve is required in an existing three port cavity.

TECHNICAL DATA

NOTE: DATA MAY VARY BY CONFIGURATION. SEE CONFIGURATION SECTION.

Maximum Operating Pressure	350 bar
Maximum Valve Leakage at 110 SUS (24 cSt)	0,07 cc/min.
Seal kit - Cartridge	Buna: 990202007
Seal kit - Cartridge	Polyurethane: 990002002
Seal kit - Cartridge	Viton: 990202006

CONFIGURATION OPTIONS

Model Code Example: CXFCXCN

CONTROL (X)

- **X** Not Adjustable

CRACKING PRESSURE (C)

- **C** 30 psi (2 bar)
- **A** 4 psi (0,3 bar)
- **B** 15 psi (1 bar)
- **D** 50 psi (3,5 bar)
- **E** 75 psi (5 bar)
- **F** 100 psi (7 bar)
- **Z** 1 psi (0,07 bar)

SEAL MATERIAL (N)

- **N** Buna-N
- **V** Viton

MATERIAL/COATING

- Standard Material/Coating
- **/LH** Mild Steel, Zinc-Nickel

© 2018 Sun Hydraulics Corporation